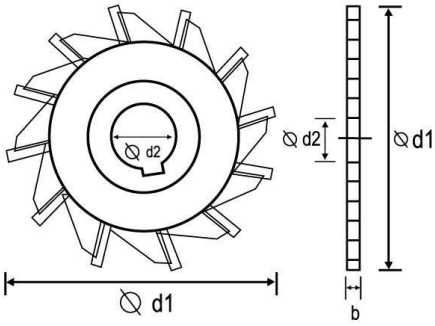

CARBIDE SIDE MILLING CUTTERS

SC 焊刃式側銑刀

unit:mm

Order Code.	d1	b	d2	Z
SC-0750514	75	5.0	25.4	14
SC-0750614	75	6.0	25.4	14
SC-0750714	75	7.0	25.4	14
SC-0750814	75	8.0	25.4	14
SC-0751014	75	10.0	25.4	14
SC-0751214	75	12.0	25.4	14
SC-1000516	100	5.0	25.4	16
SC-1000616	100	6.0	25.4	16
SC-1000716	100	7.0	25.4	16
SC-1000816	100	8.0	25.4	16
SC-1001016	100	10.0	25.4	16
SC-1001216	100	12.0	25.4	16
SC-1250618	125	6.0	25.4	18
SC-1250718	125	7.0	25.4	18
SC-1250818	125	8.0	25.4	18
SC-1251018	125	10.0	25.4	18
SC-1251218	125	12.0	25.4	18
SC-1500620	150	6.0	25.4	20
SC-1500820	150	8.0	25.4	20
SC-1501020	150	10.0	25.4	20
SC-1501220	150	12.0	25.4	20
SC-1750642	175	6.0	25.4	42
SC-1750822	175	8.0	25.4	22
SC-1751022	175	10.0	25.4	22
SC-1751222	175	12.0	25.4	22
SC-2000624	200	6.0	25.4	24
SC-2000824	200	8.0	25.4	24
SC-2001024	200	10.0	25.4	24
SC-2001224	200	12.0	25.4	24

SC

MG Micro | Z Flute | H6 | BW NORM