Turning•Chamfering

DSDNN

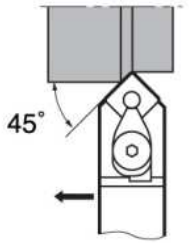

Cutting edge style **D**

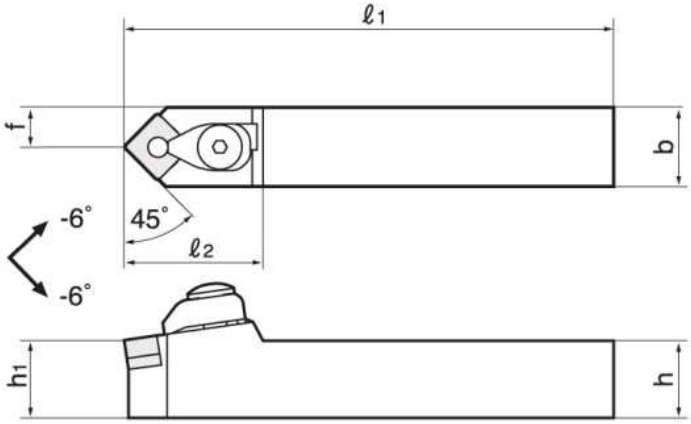

● Basic-choice chipbreaker

Appl.	Precision finishing	Finishing	Medium cutting	Roughing
Type	TF	TS	TM	TH
Shape	(12)	(12)	(12)	(12)

Appl.	Medium cutting	Medium cutting	Precision finishing	
Type	SM	CM	PCBN/PCD	
Shape	(12)	(12)	(12)	

For details see pp. 61 - 67

Cat. No.	Stock	Insert	Std. Corner R	Dimensions (mm) h	b	ℓ1	ℓ2	h1	f	f1	Shim	Spring pin	Lever	Clamp	Clamping screw	Piston	Spring	Wrench
DSDNN2020K12	●	SN□□1204□□	0.8	20	20	125	36	20	10	-	LSS42	LSP4	DLCL43	DCPM-43	DLCS43	DPIS43	BP-10	P-3
DSDNN2525M12	●	-57, -65 type chipbreaker cannot be used		25	25	150	36	25	12.5	-								P-4