Profiling

DDQN R/L

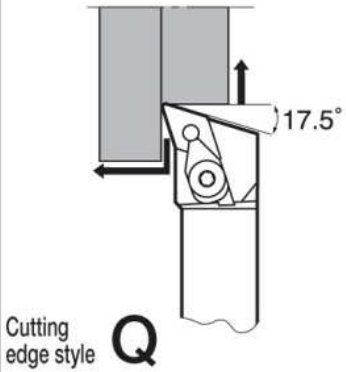

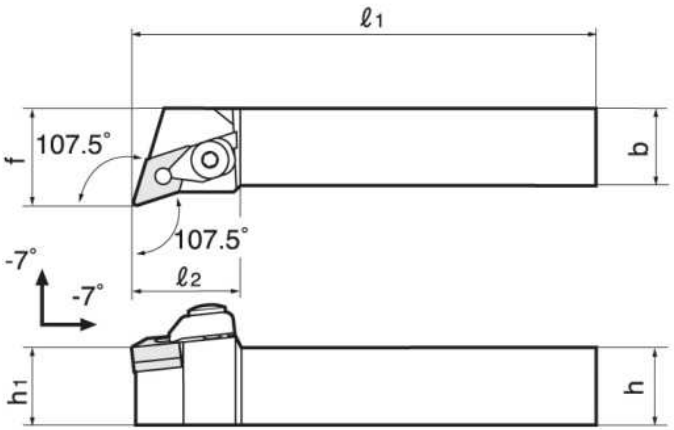

Right hand (R) shown

● Basic-choice chipbreaker

Appl.	Precision finishing	Finishing	Medium cutting	Roughing
Type	TF	TS	TM	TH
Shape	(1504)	(1504, 06)	(1504, 06)	(1504, 06)

Appl.	Medium cutting	Medium cutting	Precision finishing	
Type	SM	CM	PCBN/PCD	
Shape	(1504, 06)	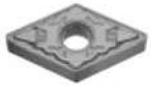 (1504, 06)	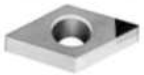 (1504, 06)	

For details see pp. 52 - 59

Cat. No.	Stock R	Stock L	Insert	Std. Corner R	h	b	ℓ1	ℓ2	h1	f	f1	Shim	Spring pin	Lever	Clamp	Clamping screw	Piston	Spring	Wrench
DDQNR/L2020K15	●	●	DN□□1504□□ -57, -TU type chipbreaker cannot be used	0.8	20	20	125	35	20	25	-	LSD42	LSP4	DLCL43	DCPM-43	DLCS43	DPIS43	BP-10	P-3
DDQNR/L2525M15	●	●			25	25	150	35	25	32	-								
DDQNR/L3225P15	●	●			32	25	170	35	32	32	-								
DDQNR/L2020K1506	●	●	DN□□1506□□ -57, -TU type chipbreaker cannot be used		20	20	125	35	20	25	-						DPIS44		P-4
DDQNR/L2525M1506	●	●			25	25	150	35	25	32	-								
DDQNR/L3225P1506	●	●			32	25	170	35	32	32	-								