Facing

DSKN R/L

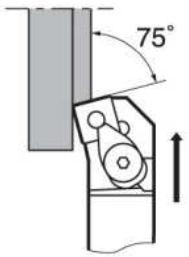

Cutting edge style **K**

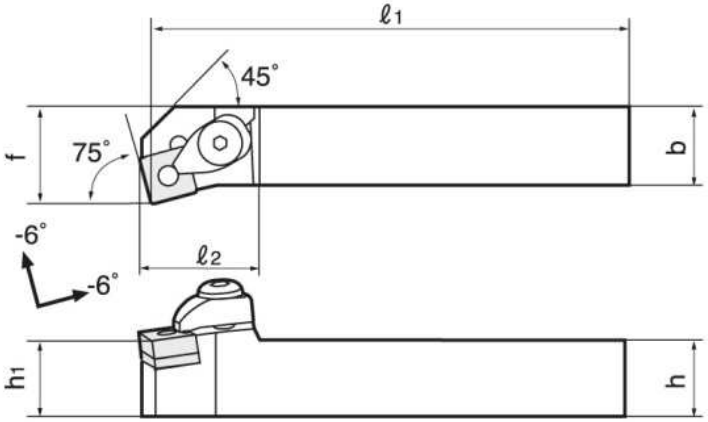

Right hand (R) shown

● Basic-choice chipbreaker

Appl.	Precision finishing	Finishing	Medium cutting	Roughing
Type	TF	TS	TM	TH
Shape	(12)	(12)	(12)	(12)

Appl.	Medium cutting	Medium cutting	Precision finishing	
Type	SM	CM	PCBN/PCD	
Shape	(12)	(12)	(12)	

For details see pp. 61 - 67

Cat. No.	Stock R	Stock L	Insert	Std. Corner R	Dimensions (mm) h	b	ℓ1	ℓ2	h1	f	f1	Shim	Spring pin	Lever	Clamp	Clamping screw	Piston	Spring	Wrench
DSKNR/L2020K12	○	○	SN□□1204□□ -57, -65 type chipbreaker cannot be used	0.8	20	20	125	31	20	25	-	LSS42	LSP4	DLCL43	DCPM-43	DLCS43	DPIS43	BP-10	P-3
DSKNR/L2525M12	●	●			25	25	150	31	25	32	-								P-4